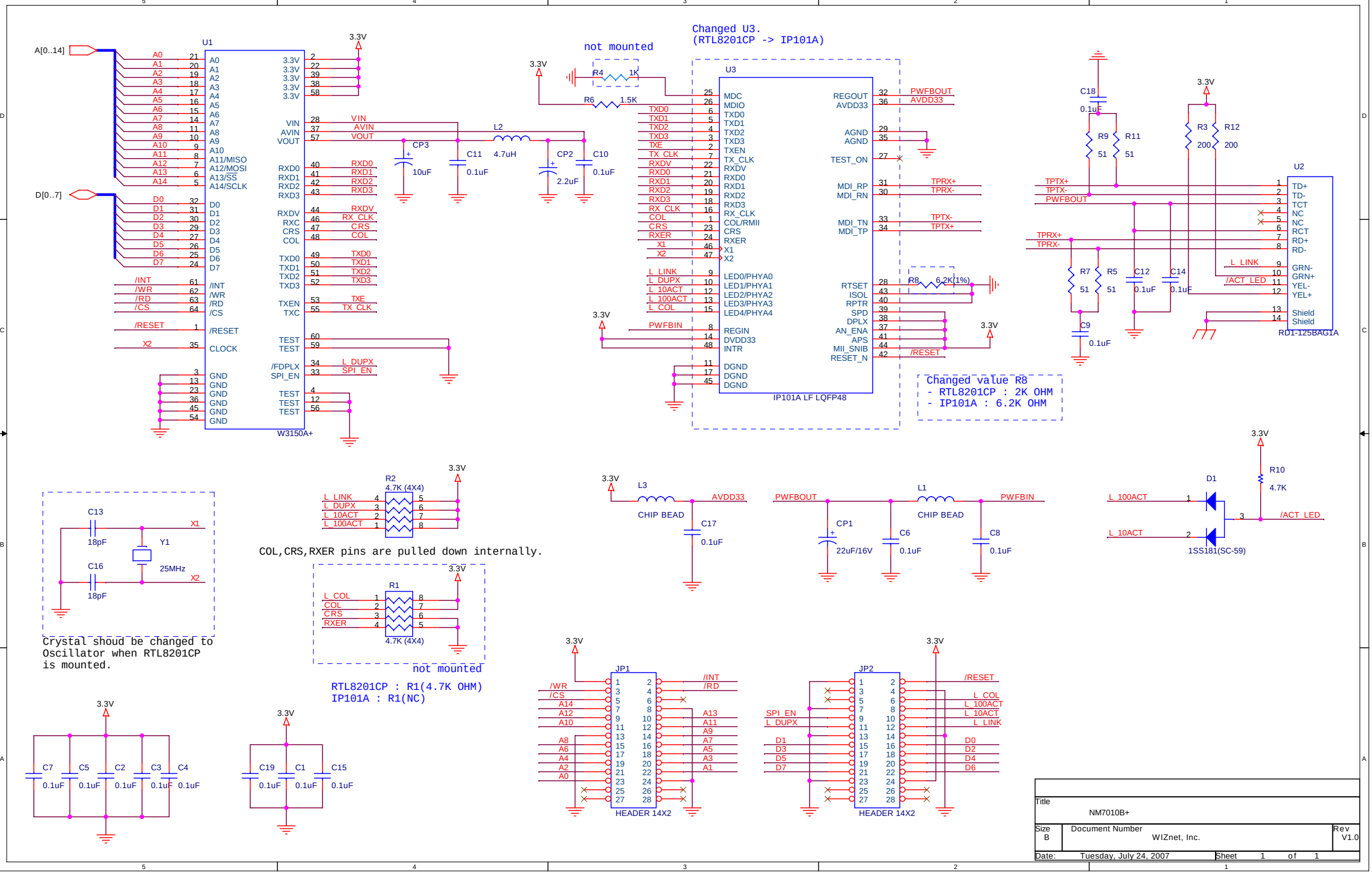
U1
W3150A+
A[0..14]
D[0..7]
3.3V
VIN
AVIN
VOUT
CP3
10uF
C11
0.1uF
L2
4.7uH
CP2
2.2uF
C10
0.1uF
not mounted
R4
1K
R6
1.5K
Changed U3.
(RTL8201CP -> IP101A)
U3
IP101A LF LQFP48
PWFBOUT
AVDD33
TPRX+
TPRX-
TPTX-
TPTX+
R8
6.2K(1%)
/RESET
PWFBIN
C18
0.1uF
R9
51
R11
51
R3
200
R12
200
U2
RD1-125BAG1A
R7
51
R5
51
C12
0.1uF
C14
0.1uF
C9
0.1uF
L_LINK
/ACT_LED
Changed value R8
- RTL8201CP : 2K OHM
- IP101A : 6.2K OHM
C13
18pF
Y1
25MHz
C16
18pF
X1
X2
Crystal shoud be changed to
Oscillator when RTL8201CP
is mounted.
R2
4.7K (4X4)
L_LINK
L_DUPX
L_10ACT
L_100ACT
COL,CRS,RXER pins are pulled down internally.
R1
4.7K (4X4)
L_COL
COL
CRS
RXER
not mounted
RTL8201CP : R1(4.7K OHM)
IP101A : R1(NC)
L3
CHIP BEAD
C17
0.1uF
CP1
22uF/16V
C6
0.1uF
L1
CHIP BEAD
C8
0.1uF
D1
R10
4.7K
1SS181(SC-59)
JP1
HEADER 14X2
JP2
HEADER 14X2
C7
C5
C2
C3
C4
0.1uF
C19
C1
C15
Title
NM7010B+
Size
B
Document Number
WIZnet, Inc.
Rev
V1.0
Date:
Tuesday, July 24, 2007
Sheet
1
of
1